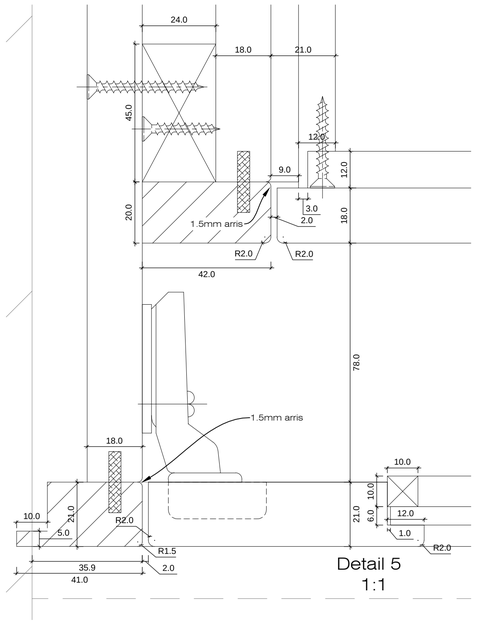

Detail 5
1:1

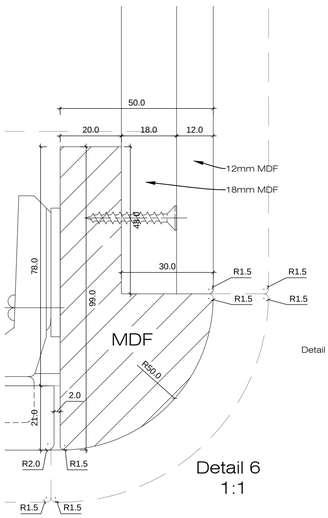

Detail 6
1:1

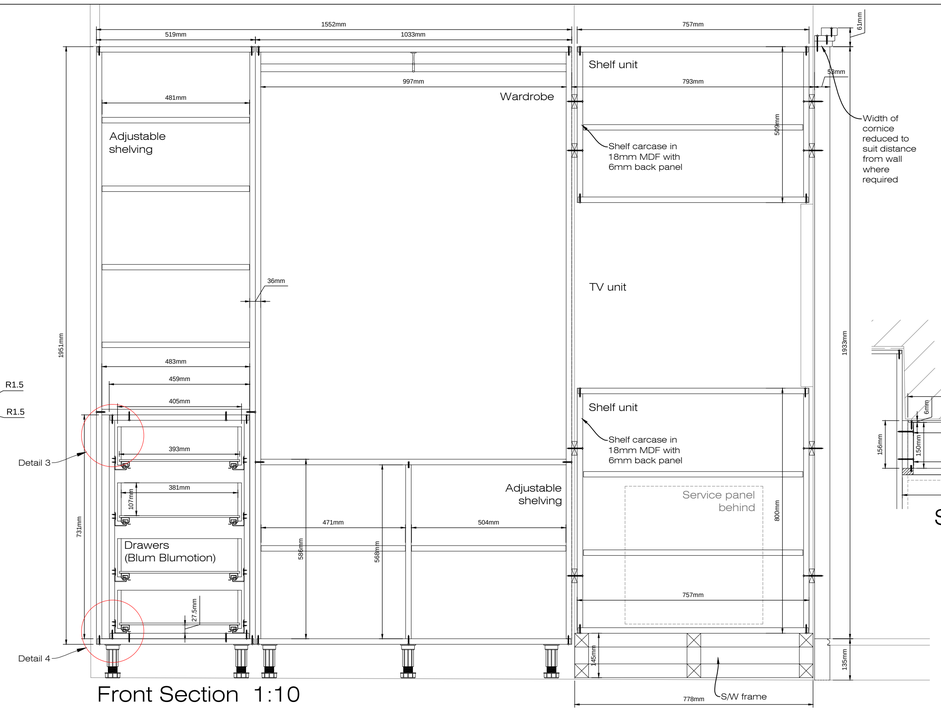

Front Section 1:10

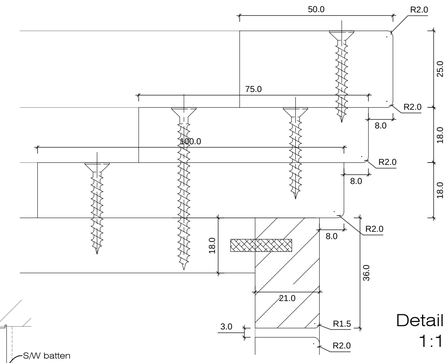

Detail 1
1:1

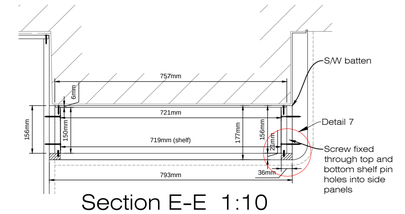

Section E-E 1:10

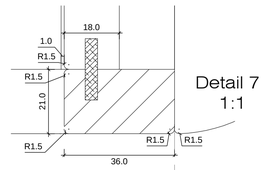

Detail 7
1:1

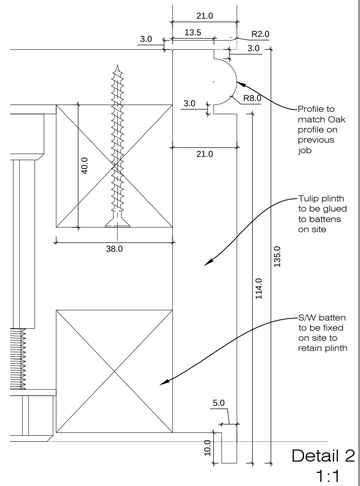

Detail 2
1:1

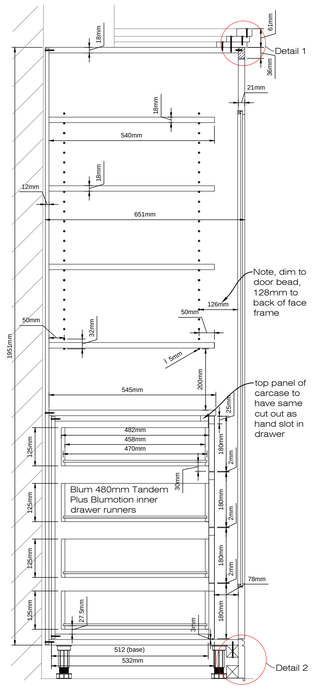

Section A-A
1:10

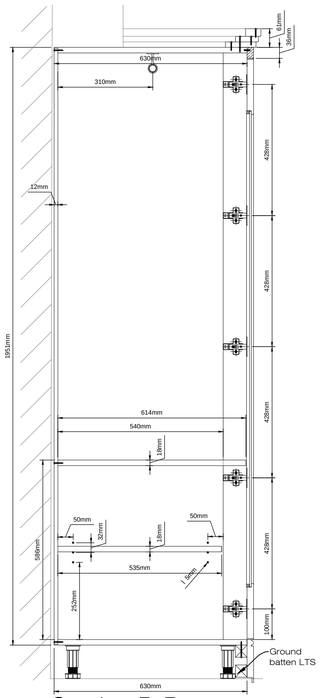

Section B-B
1:10

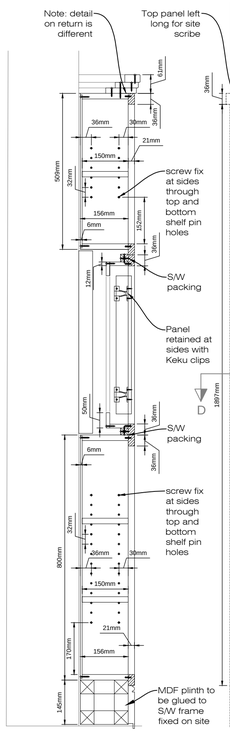

Section C-C
1:10

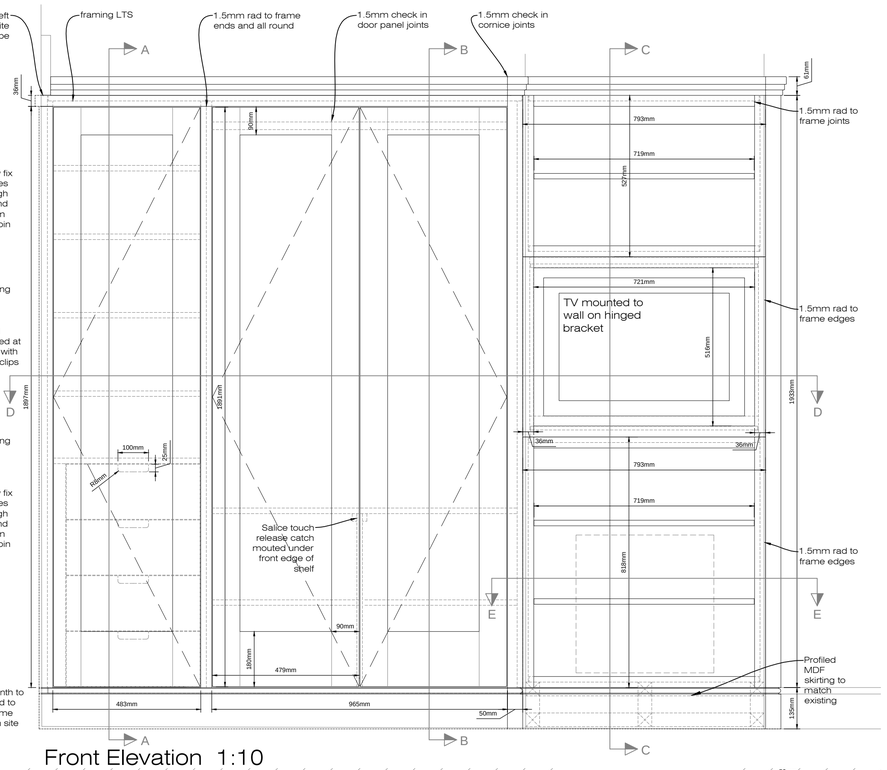

Front Elevation 1:10

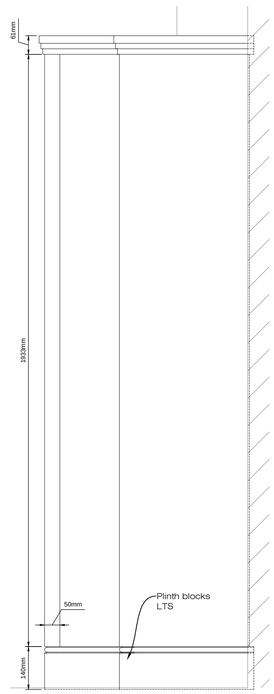

Side Elevation 1:10

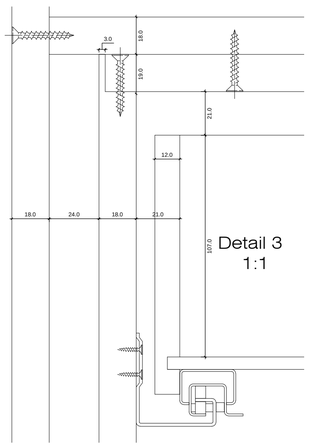

Detail 3
1:1

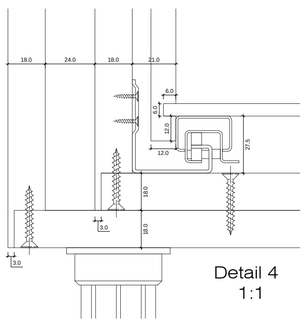

Detail 4
1:1

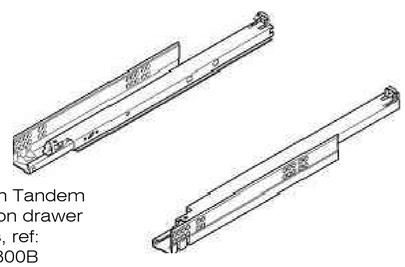

Blum 480mm Tandem Plus Blumotion drawer runners, ref: 560H4800B

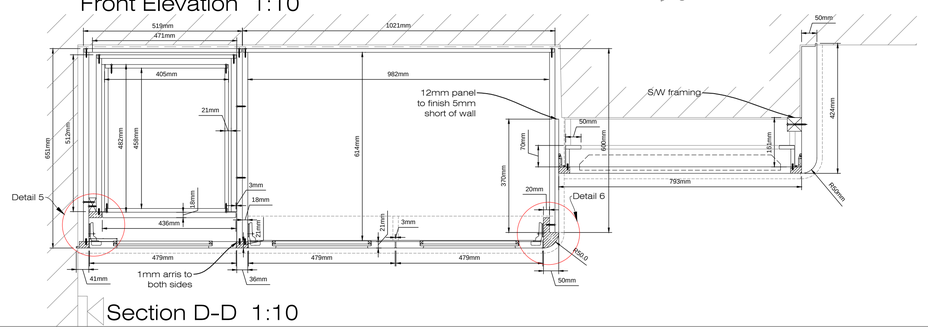

Section D-D 1:10

GENERAL NOTES

Specification

1nr Wardrobe / Storage cupboard/ TV & shelving unit.

Main components in 18 & 12 MDF as detailed.

Doors to be 20mm solid Tulip with 6mm MDF Panels. Doors to opened with Salice touch release latches TBC, mounted to underside of wardrobe shelf.

Hinges 5nr per door.

Drawers to be 12mm Gaboon plywood to sides and 6mm GP to base with fronts to be 18mm MDF

Drawers to be fitted to 480mm Tandem Plus Tip On inner drawer runners.

Plinth straight sections to be formed in 18mm MDF with curved corner sections formed in 50mm MDF, see details.

Cornice formed in 3 No. overlapping layers of MDF, 2 x 18mm and 25mm to top, see details.

All items excluding drawer boxes to be finished in 10% PU Factory Spray Colour white TBC.

All cabinets factory assembled. fix cabinet feet bases but not legs to help with access.

All face frames to be supplied loose to site for glue and tape fitting to be located with continious 4mm grooves and 4mm biscuits at close centres.

All skirting & cornice panels to be supplied loose to site for fitting.

REV	DESCRIPTION	DATE
A	Drawing details updated, section E-E added.	13/10/11
B	Detail 6 to end of wardrobe revised, skirting width revised, catch detail omitted, hinge quantity reduced.	17/10/11

DOVETAIL SPECIALIST JOINERY
A MEMBER OF BURTON GROUP

BURTON GROUP
THE HOP UNIT, PROVENDER LANE
NORTON, FAVERSHAM, KENT
ME13 0SG
Tel. 01795 520011 Fax. 01795 520033
WEBSITE: www.burton-group.co.uk
EMAIL: info@burton-group.co.uk

Client
Oast (BC914)

Drawing Title
Bedroom 5 Cupboards

Scale 1 : 10, 1:1
Date 01/09/11
Drawn By SA

Drawing No. DC916ZE-01
Rev B